PRELIMINARY DATA SHEET

MDFE2PFA-023

DS2PFA-023

MMID® (Front End Module) for 5 GHz WiFi Communication

■ Applications

MMID® (Front End Module) for 5 GHz WiFi
(SPDT Switch, Power Amplifier and Low Noise Amplifier embedded)

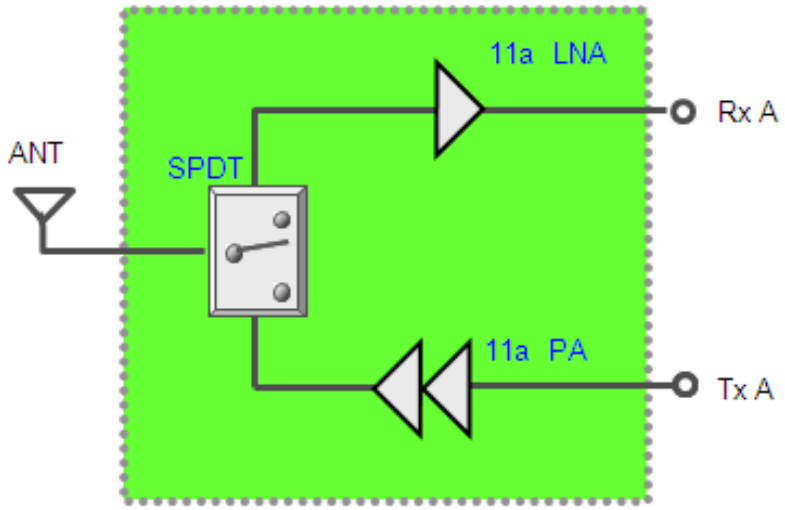

■ Features

- Package ..... ULLGA 16 pin Leadless PKG, MSL=3
  (2.5mm × 2.5mm × 0.4mm max. RoHS Compliant)
- Positive Voltage Control.....+3.3V

■ Absolute Maximum Ratings

Symbol	Parameter	Conditions	Rating	Unit
V_{dd}	Supply Voltage	Ta=25°C	+5.5	V
V_{ref}, V_{c1}, V_{c2}, LNA_EN	Power Control Voltage	Ta=25°C	+3.6	V
Tx	Tx Input Power at Tx pin	Ta=25°C	+10	dBm
ANT	Rx Input Power at ANT pin	Ta=25°C	+5	dBm
T_A	Operating Temperature	-	-40 to +85	°C
T_{stg}	Storage Temperature	-	-40 to +140	°C
MSL	Moisture Sensitivity	(JEDEC)	Level 3	

Note: All the technical data and information contained herein are subject to change without prior notice.

■ Electrical Specifications

ANT-Rx Path (High Gain Mode)

(Vdd, LNA_EN=Vc1=3.3V, Vc2=Vref=0.0V, Ta=25°C)

Symbol	Parameter	Conditions	Min.	Typ.	Max.	Unit
f_0	Operation Frequency	-	4.9	-	5.85	GHz
Gain	Small Signal Gain	-	8.0	10.5		dB
NF	Noise Figure	-	-	2.0	-	dB
RL_{in}	Input Return Loss	-	8.0	10.0		dB
RL_{out}	Output Return Loss	-	8.0	14.5		dB
I_{dd}	Current Consumption	-	-	10.5	15.0	mA

ANT-TX Path

(Vdd, Vref=Vc2=3.3V, Vc1=LNA_EN=0.0V, Ta=25°C)

Symbol	Parameter	Conditions	Min.	Typ.	Max.	Unit
f_0	Operation Frequency	-	4.9	-	5.85	GHz
Gain	Small Signal Gain	-	28.5	32.0	-	dB
EVM	Error Vector Magnitude	54Mb/s OFDM At Pout=17.5dBm	-	2.3	3.8	%
I_{dd}	Current Consumption		-	183	230	mA
RL_{in}	Input Return Loss	-	8.0	13.0	-	dB
V_{DET}	Detector	54Mb/s OFDM At Pout=19dBm	690	870	1090	mV

Note: All the technical data and information contained herein are subject to change without prior notice.

■ Package Outline and Pin Connections

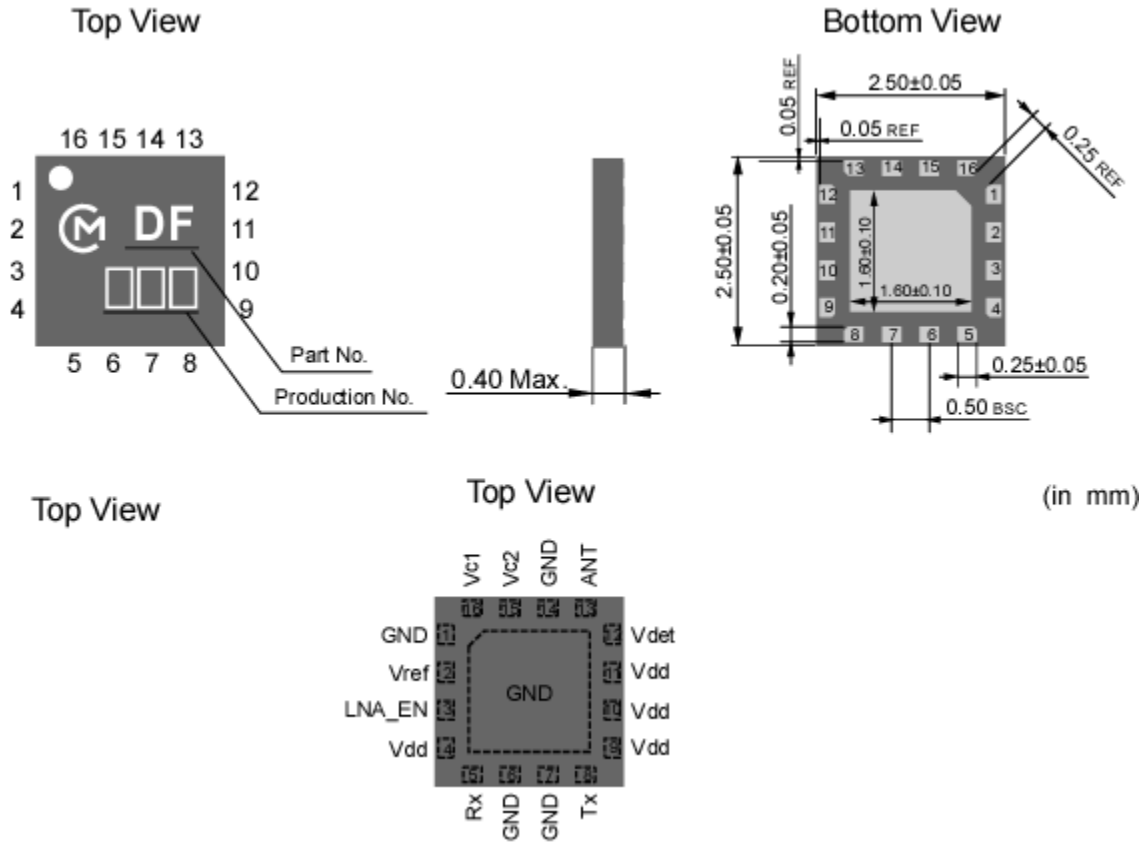

■ Land Pattern

■

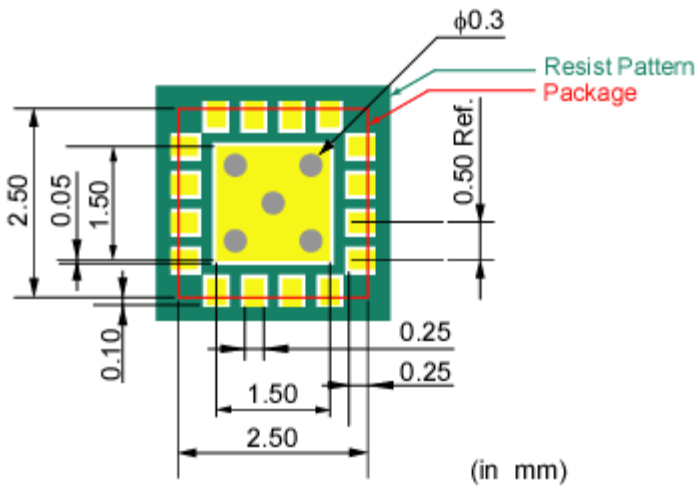

Note: All the technical data and information contained herein are subject to change without prior notice.

Truth Table

Mode	Vc1	Vc2	Vref	LNA_EN	Vdd
ANT - Rx (LNA on)	H	L	L	H	H
ANT – Rx (LNA off)	H	L	L	L	H
ANT - Tx	L	H	H	L	H

H: Vdd=3.3 V, Other control=3.3V
L: 0 V

Note: All the technical data and information contained herein are subject to change without prior notice.

Evaluation Board

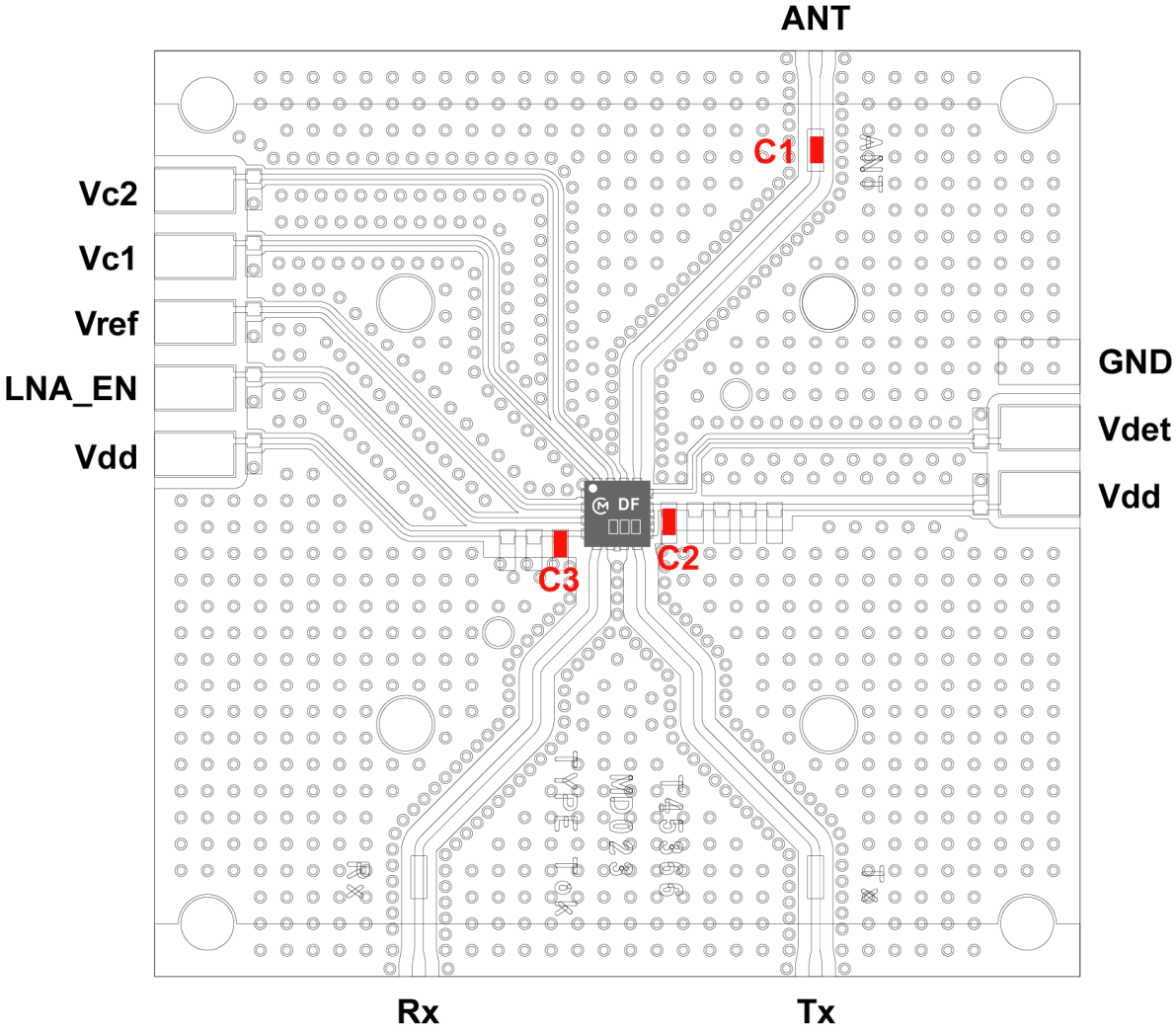

Parts List:

Part No.	Products	Value
C1	GRM15 (Murata)	100 pF
C2, C3		0.1 uF

*C1: For DC block.

*Please place C2 and C3 as close as possible to the FEM to have good performance.

Substrate

Material : FR4 (εr=4.4)
Size : 35mm × 35mm
Thickness : 0.2mm + Dummy 0.8mm

Transmission Line

Width = 0.34mm (50 ohm Line)
(Gap = 0.5mm)

Note: All the technical data and information contained herein are subject to change without prior notice.

■ **Evaluation Circuit**

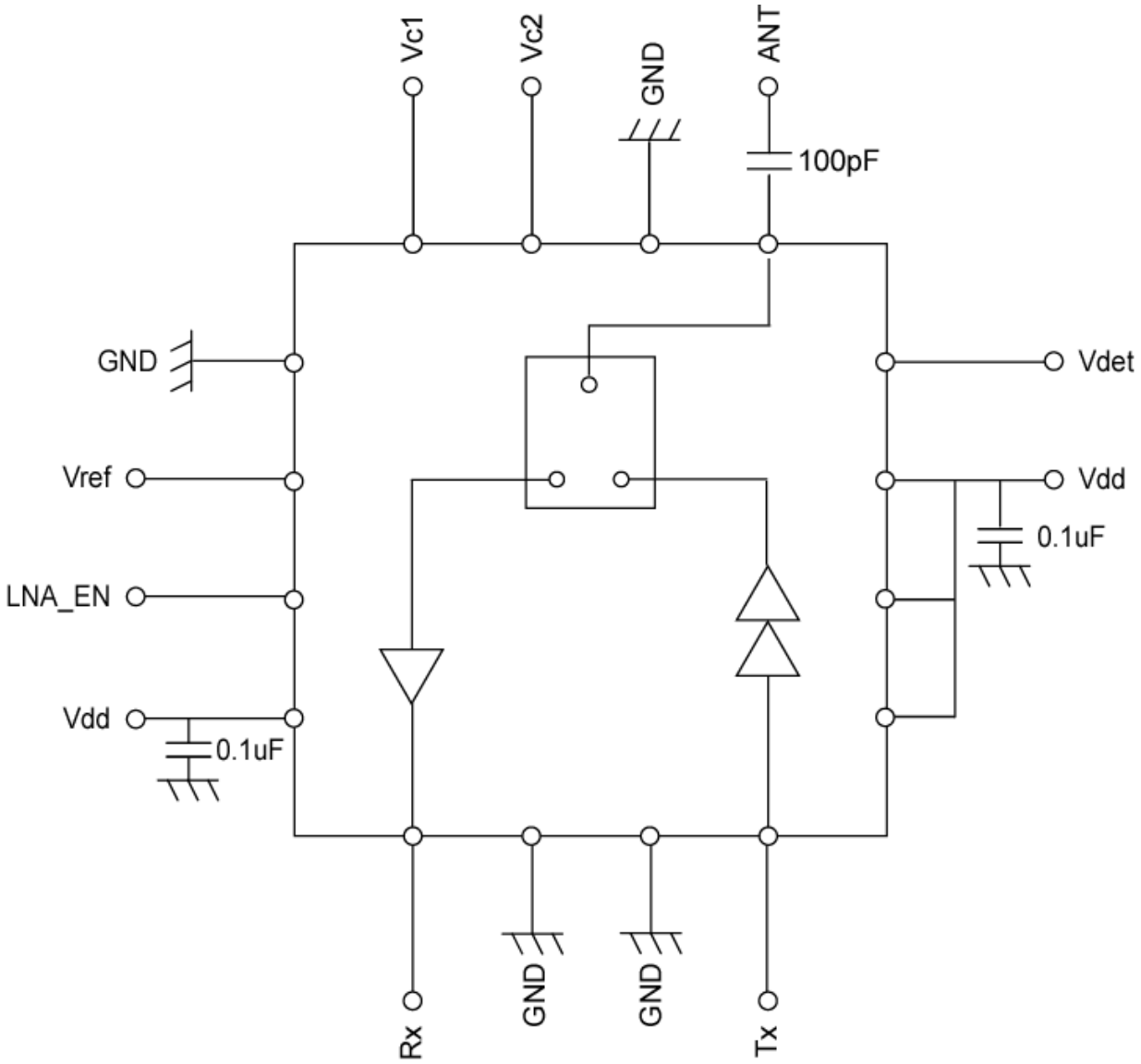

Note: All the technical data and information contained herein are subject to change without prior notice.

■ **Typical performance** (all performance, EVB loss are de-embedded)

ANT – Rx (LNA on)

S-Parameter

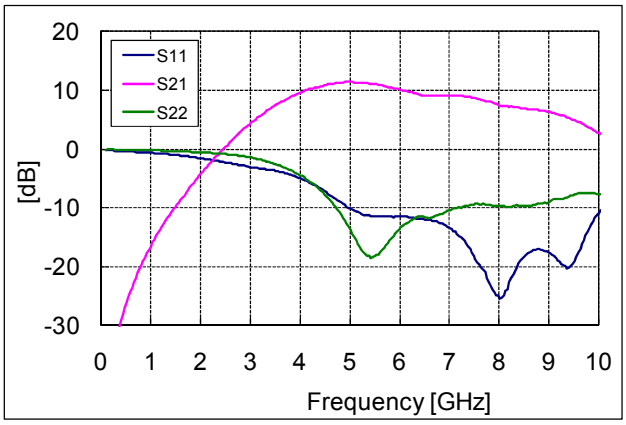

NF

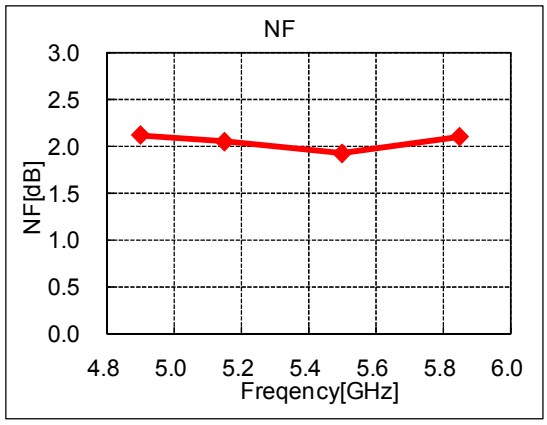

Note: All the technical data and information contained herein are subject to change without prior notice.

ANT – Tx

S-Parameter

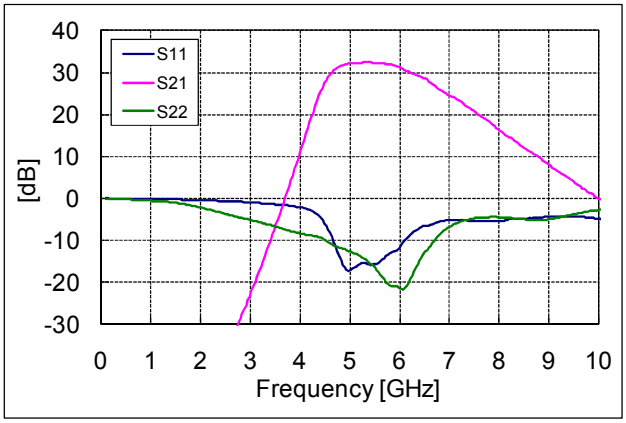

Gain

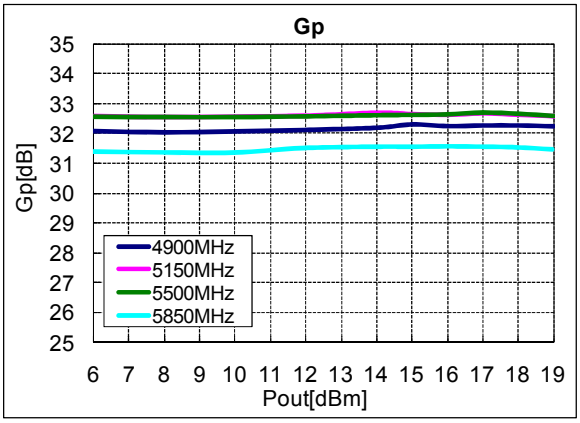

EVM

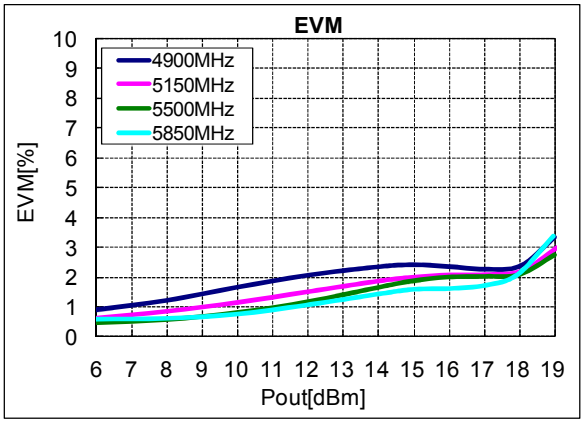

Idd

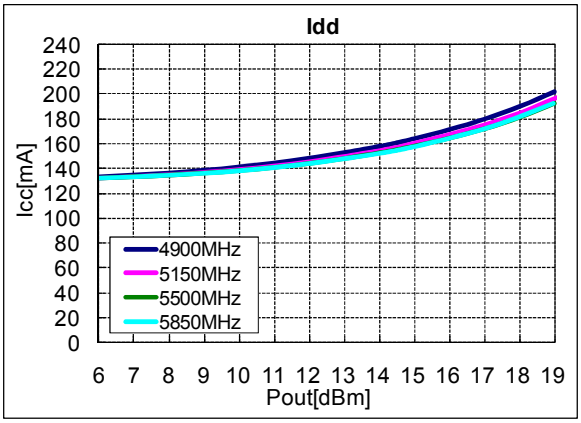

Note: All the technical data and information contained herein are subject to change without prior notice.

⚠

CAUTION -Limitation of Applications-
The product is designed and manufactured for consumer application only and is not available for any application listed below which requires especially high reliability for the prevention of such defect as may directly cause damage to the third party's life, body or property.

- Aircraft equipment.
- Aerospace equipment.
- Undersea equipment.
- Medical equipment.
- Transportation equipment (vehicles, trains, ships, etc.).
- Traffic signal equipment.
- Disaster prevention / crime prevention equipment.
- Application of similar complexity and/ or reliability requirements to the applications listed in the above.

Note: All the technical data and information contained herein are subject to change without prior notice.

■ Change history

Version	Date	Author	Comment
	May.10.2011	Yuichi TANNAN	Initial

Note: All the technical data and information contained herein are subject to change without prior notice.